NAME:	SUSL0900WHC
SIZE:	900
WK/WH:	WALL HUNG
CONFIGURATION:	CENTRE BOWL

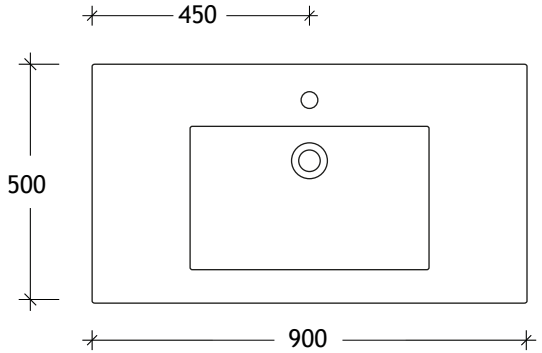

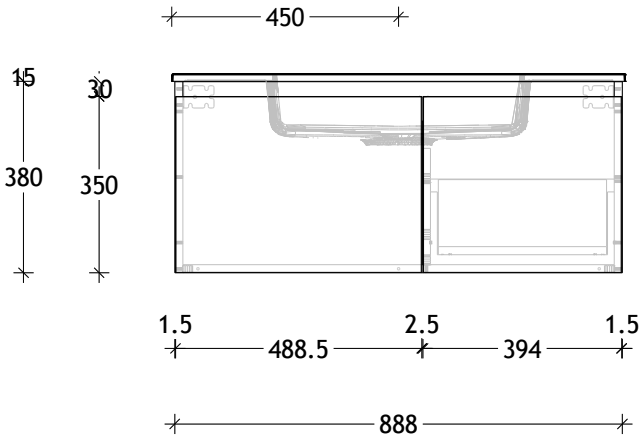

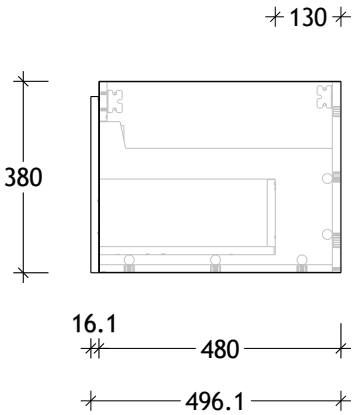

PLEASE NOTE: Do not perform any plumbing rough in prior to taking delivery of your vanity, as all measurements are nominal and are subject to change. Measure exact locations from your vanity once it is on site.